THIS DRAWING IS UNPUBLISHED. RELEASED FOR PUBLICATION - ,- .
© COPYRIGHT - BY TYCO ELECTRONICS CORPORATION. ALL RIGHTS RESERVED.

LOC	DIST
AD	00

REVISIONS

P	LTR	DESCRIPTION	DATE	DWN	APVD
	H	REVISED PER EC 0S12-0239-05	28OCT05	JDP	AMS

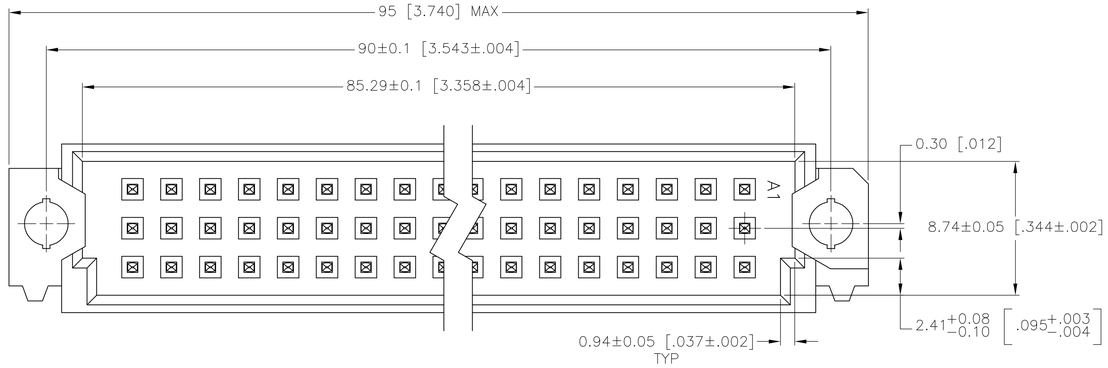

1. HOUSING MATERIAL: GLASS-FILLED POLYESTER, GRAY.
2. POST MATERIAL: BRASS.
3. POST FINISH: DIN 41612 CLASS 3 IN CONTACT AREA. TIN-LEAD PLATE ON POSTS.
4. POST FINISH: DIN 41612 CLASS 2 IN CONTACT AREA. TIN-LEAD PLATE ON POSTS.
5. RECOMMENDED HOLE SIZE FOR MANUAL APPLICATION OF CONNECTOR ONTO PC BOARD.
6. PART NUMBER, DATE CODE MARKED THIS APPROXIMATE AREA.
7. MARKING ON THIS SIDE.

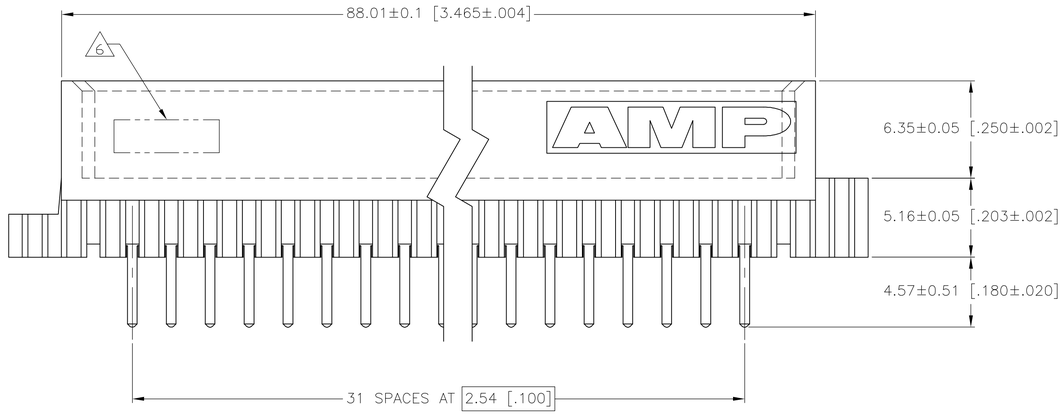

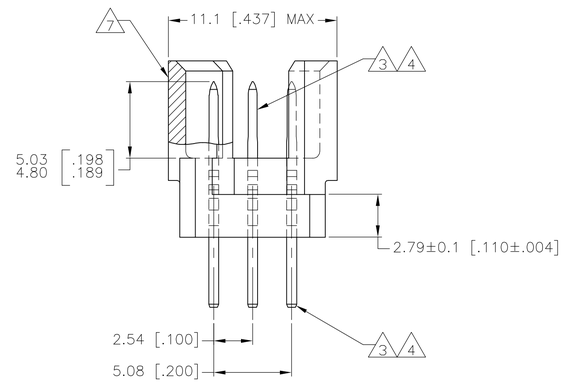

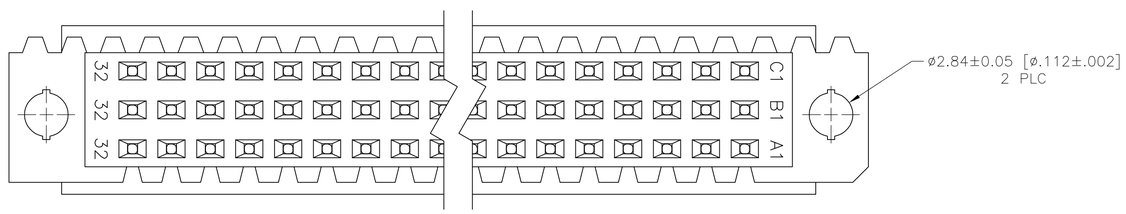

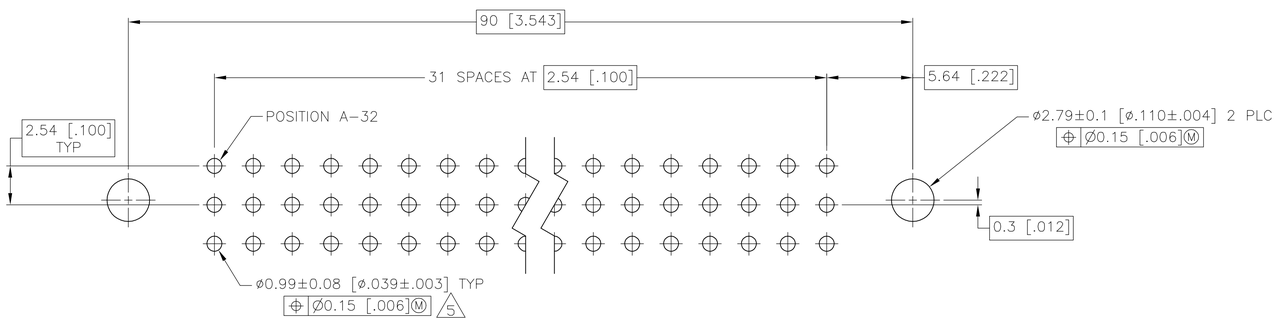

PC BOARD LAYOUT

OBSOLETE	3	1-32	X	X	X	96	650470-9
	4	1-32	X	X	X	96	650470-5
NOTES		POSITIONS LOADED	C	B	A	NO OF LOADED POSITIONS	ASSY PART NUMBER
			ROWS LOADED				

THIS DRAWING IS A CONTROLLED DOCUMENT.

DIMENSIONS: mm [INCHES]

TOLERANCES UNLESS OTHERWISE SPECIFIED:
0 PLC ± -
1 PLC ± -
2 PLC ± 0.13 [.005]
3 PLC ± -
4 PLC ± -
ANGLES ± -

MATERIAL 1 2
FINISH 3 4

DWN L.BRINER 18MAR91
CHK D.C.RUBENDALL 26MAR91
APVD D.C.RUBENDALL 26MAR91
PRODUCT SPEC —
APPLICATION SPEC —
WEIGHT —

tyco Electronics
Tyco Electronics Corporation
Harrisburg, PA 17105-3608

NAME PIN ASSEMBLY, EUROCARD, TYPE R

SIZE	CAGE CODE	DRAWING NO	RESTRICTED TO
A1	00779	C-650470	—

CUSTOMER DRAWING | SCALE 5:1 | SHEET 1 OF 1 | REV H

AMP 4805 REV 31MAR2000