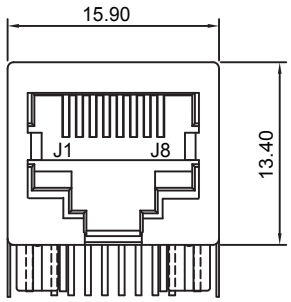

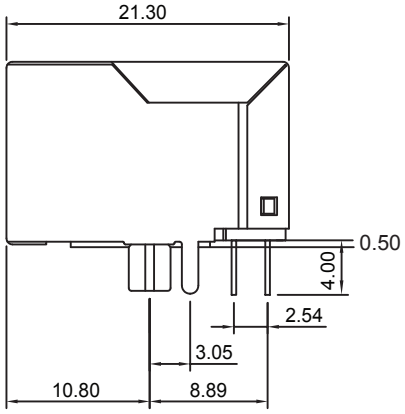

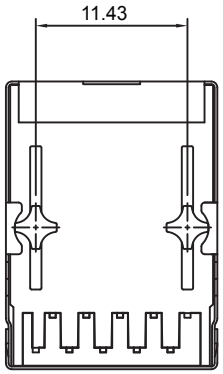

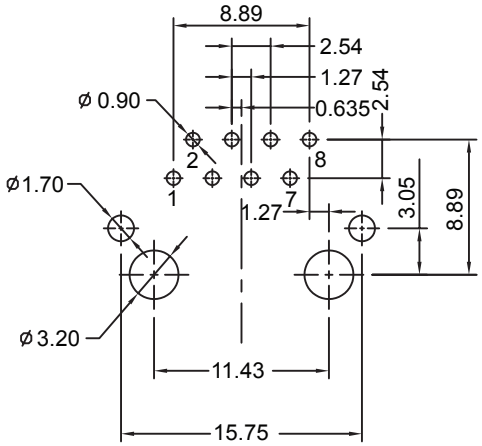

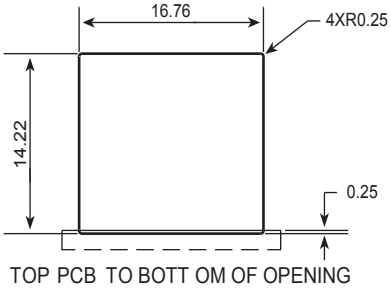

SUGGESTED PCB LAYOUT (TOP VIEW)

ELECTRICAL SPECIFICATIONS @ 25°C unless otherwise noted:

Insertion Loss: 1-100MHZ -1.0dB MAX

Return Loss: 1-30MHZ -16.0dB MIN
30-60MHZ -14.0dB MIN
60-80MHZ -10.0dB MIN

Cross Talk: 1-30MHZ -40.0dB MIN
30-60MHZ -35.0dB MIN
60-80MHZ -30.0dB MIN

CMR: 1-100MHZ -35.0dB MIN

Hi-Pot: 1500v AC 6S 1mA

Turn Ratio: 1CT:1CT+/-3%

OCL:350uH MIN @ 100KHZ 100mV 8mA DC

Contacts: 0.35mm thick phos bronze plated with 6u' gold in contact are

Housing Material: PBT Black

Operating temperature range:0°C to +70°C

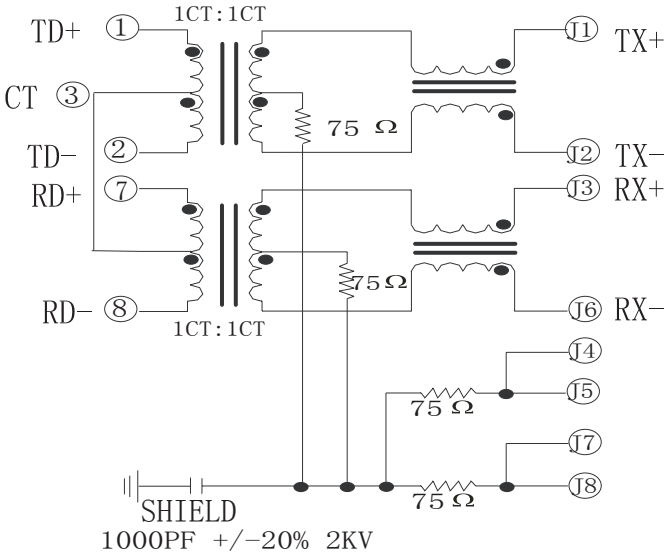

	UNIT :mm .xx +/-0.25, .xxx +/-0.13	Approved By: JP.Gong
	10/100BASE 1X1 Tab-Down RJ45	Part No:KRJ-146BNL REV. C
Drafted by:JG.CHEN		WWW.DGKYD.COM SHEET 1 OF 1